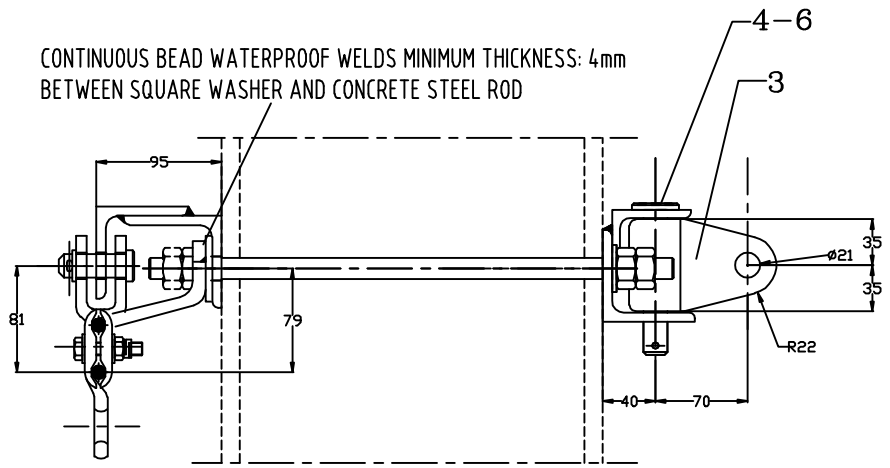


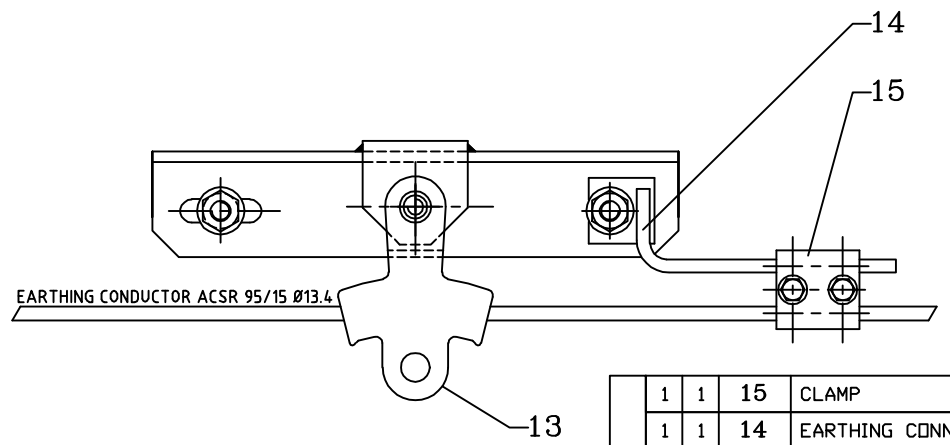


| MARK | DESIGNATION | |
|---|---|---|
| 101 | FROM HE 200 TO 240 | PR20082 |
| 102 | FROM HE 260 TO 320 | PR21097 |

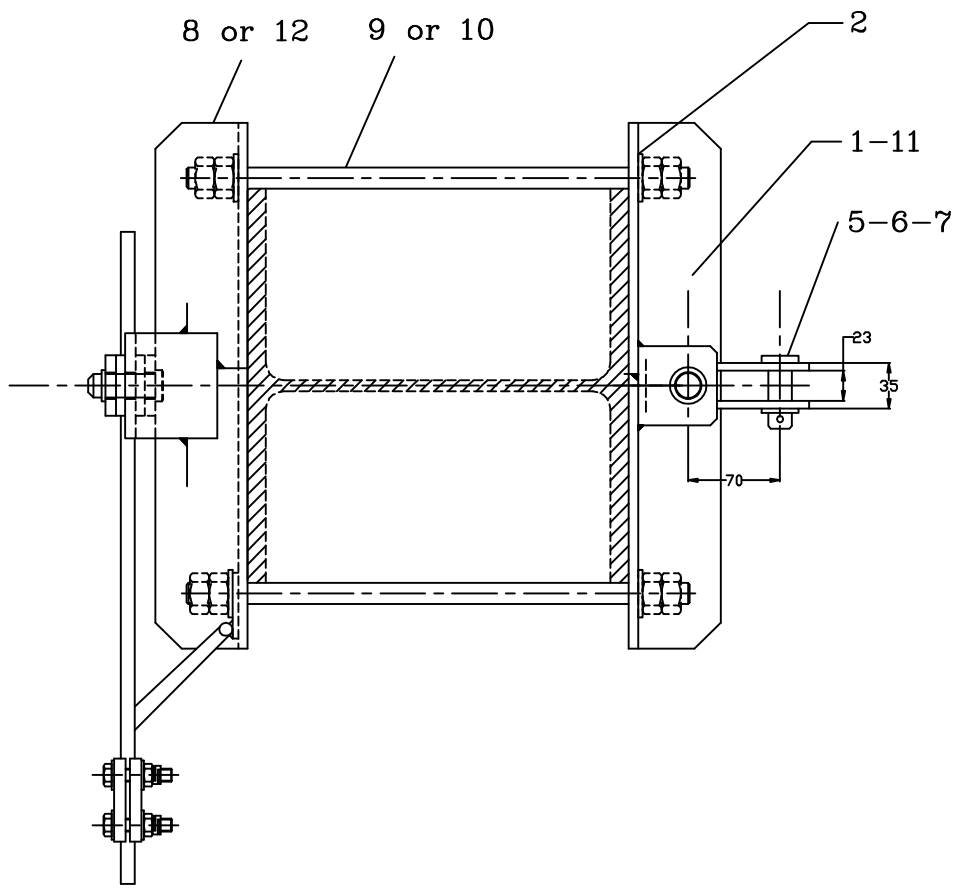


| MARK.GROUP 102 | MARK.GROUP 101 | ITEM | DESIGNATION | UNIT MASS kg | REFERENCE DRAWING | MARK |
|---|---|---|---|---|---|---|
| QUANTITY | | | | | | |
| 1 | 1 | 15 | CLAMP | 0.59 | ELC 2-4.0 | |
| 1 | 1 | 14 | EARTHING CONNECTION | 0.25 | 03LC00BDG260 | 101 |
| 1 | 1 | 13 | EARTHING CONDUCTOR SUSPESION TYPE I | 1.30 | ELC 13-1.4.0 | |
| 1 | | 12 | COUNTERPLATE WITH EARTHING CONDUCTOR | | 03LC00BDG102 | 102 |
| 1 | | 11 | HINGE SUPPORT | | 03LC00BDG088 | 102 |
| | 2 | 10 | THREADED ROD M16- 350/100 | | 03LC00BDG141 | 1611C2 |
| 2 | | 9 | THREADED ROD M16- 450/100 | | 03LC00BDG141 | 1611E2 |
| | 1 | 8 | COUNTERPLATE WITH EARTHING CONDUCTOR | | 03LC00BDG102 | 101 |
| 1 | 1 | 7 | AXIS 20-50 | | 03LC00BDG146 | 201050 |
| 2 | 2 | 6 | PIN. 4,5*40 | | 03LC00BDG145 | 45A040 |
| 1 | 1 | 5 | WASHER M20 | | 03LC00BDG142 | 20A110 |
| 1 | 1 | 4 | AXIS . 18*110 | | 03LC00BDG146 | 181110 |
| 1 | 1 | 3 | HINGE TOP TUBE | 0.78 | E.L.C 13-9.10 A rev.c | ... |
| 4 | 4 | 2 | WASHER M16N | | 03LC00BDG142 | 161110 |
| | 1 | 1 | HINGE SUPPORT | | 03LC00BDG088 | 101 |

| | | | |
|---|---|---|---|
| Proiectat | | Material: | 20082;21097 |
| Desenat | | | Inlocuieste desen nr. : |
| Verificat | | | Nr. inventar : |
| Contr.STAS | | | |
| Aprobat | | | |

Pag.

DIRECTIA INDUSTRIE

Scara:

Data:

FASTENING FOR TOP TUBE WITH EARTHING CONDUCTOR – BDG135

CRAPODINA 1 CONSOLA ST.H240;320 CU BAL TIRANT SIS SUSPENDARE C.C.