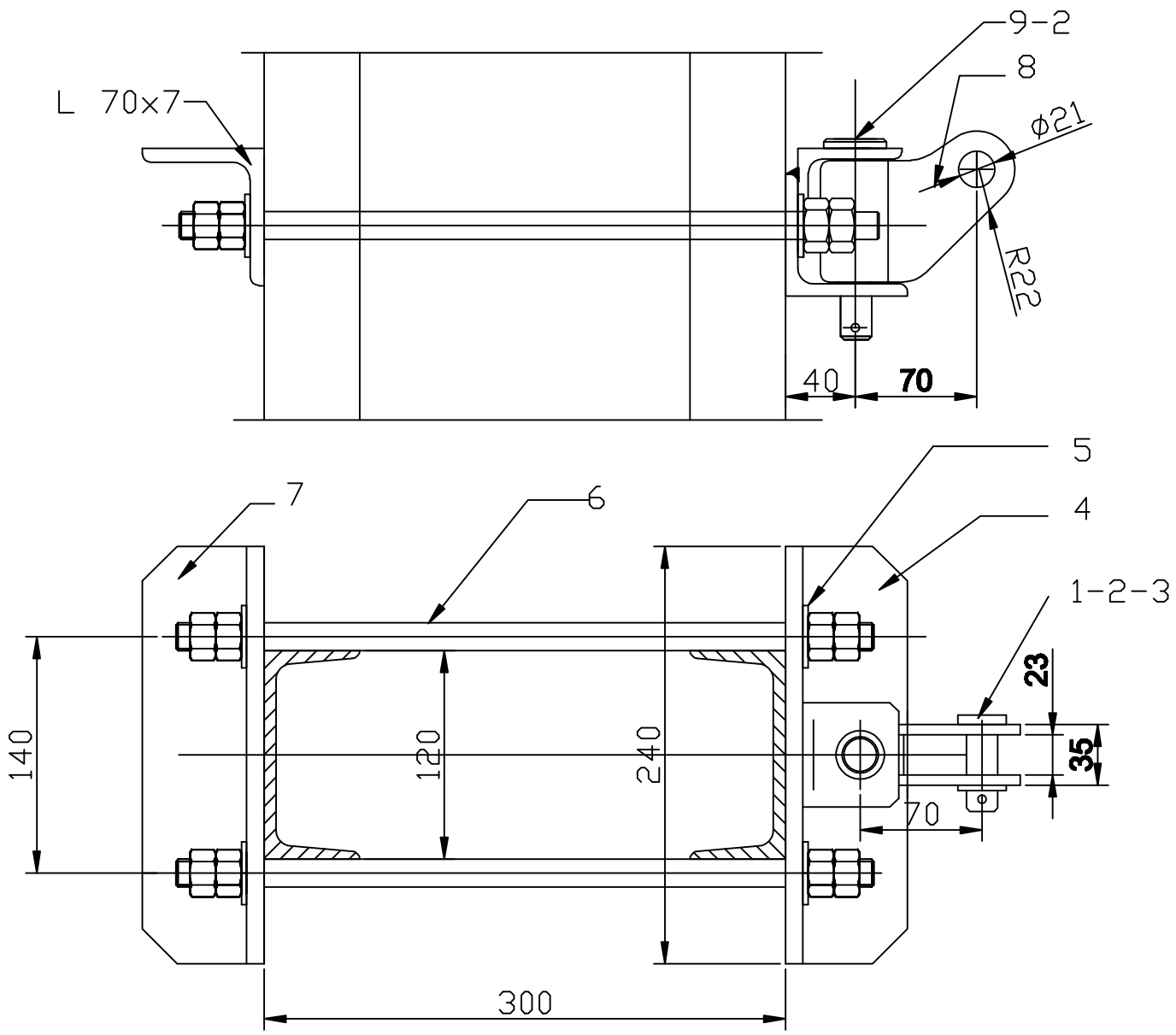

QUANTITY	ITEM	DESIGNATION	UNIT MASS kg	REFERENCE DRAWING	MARK
1	9	AXIS 18*110		03LC00BDG146	181110
1	8	HINGE STRUT TUBE		ELC 13-9.10 A rev C	
1	7	COUNTERPLATE		LC 4662-7	
2	6	THREADED ROD M16- 450/100		03LC00BDG141	1611E2
4	5	WASHER M16N		03LC00BDG142	16A110
1	4	HINGE SUPPORT		LC 4662-4	
1	3	AXIS 20-50		03LC00BDG142	201050
1	2	PIN. 4,5*40		03LC00BDG142	45A040
1	1	WASHER M20		03LC00BDG142	20A110

Proiectat		Material:	20189;20364
Desenat			Inlocuieste desen nr. :
Verificat			Nr. inventar :
Contr.STAS			
Aprobat			

Pag.

DIRECTIA INDUSTRIE

Scara:

Data:

FASTENING FOR STRUT (TOP) TUBE FOR MU (300X120) – BDG139

CRAPODINA SMU 120X300 CU BALAMA TIRANT(CONTRAFISA)