ASSEMBLY WITHOUT MID POINT ANCHOR

101

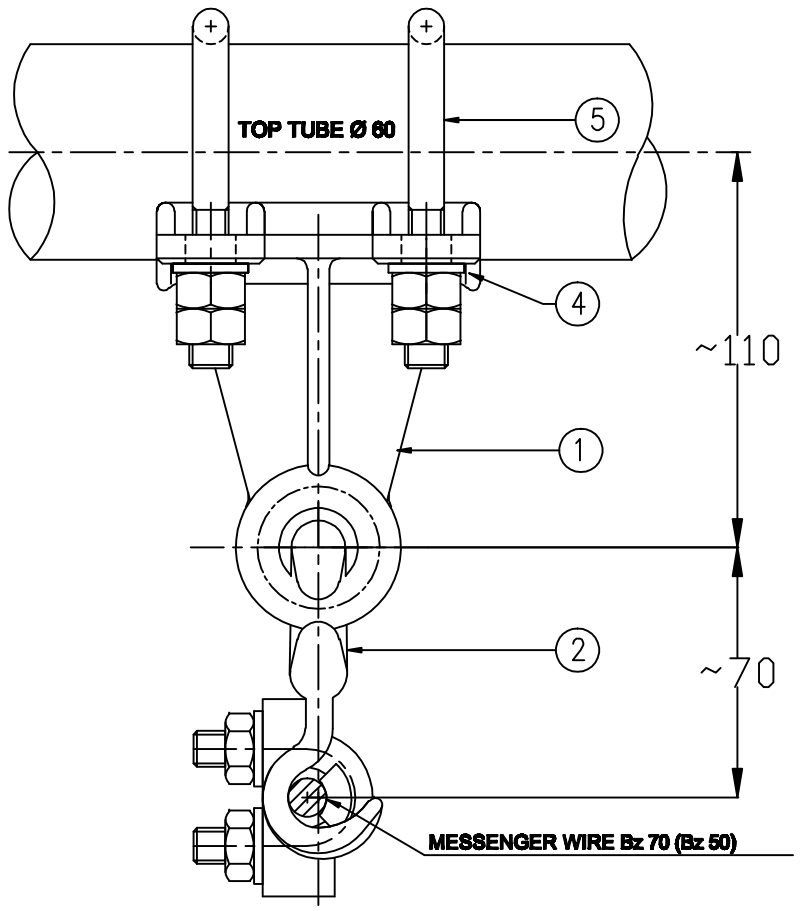

ASSEMBLY WITH MID POINT ANCHOR

102

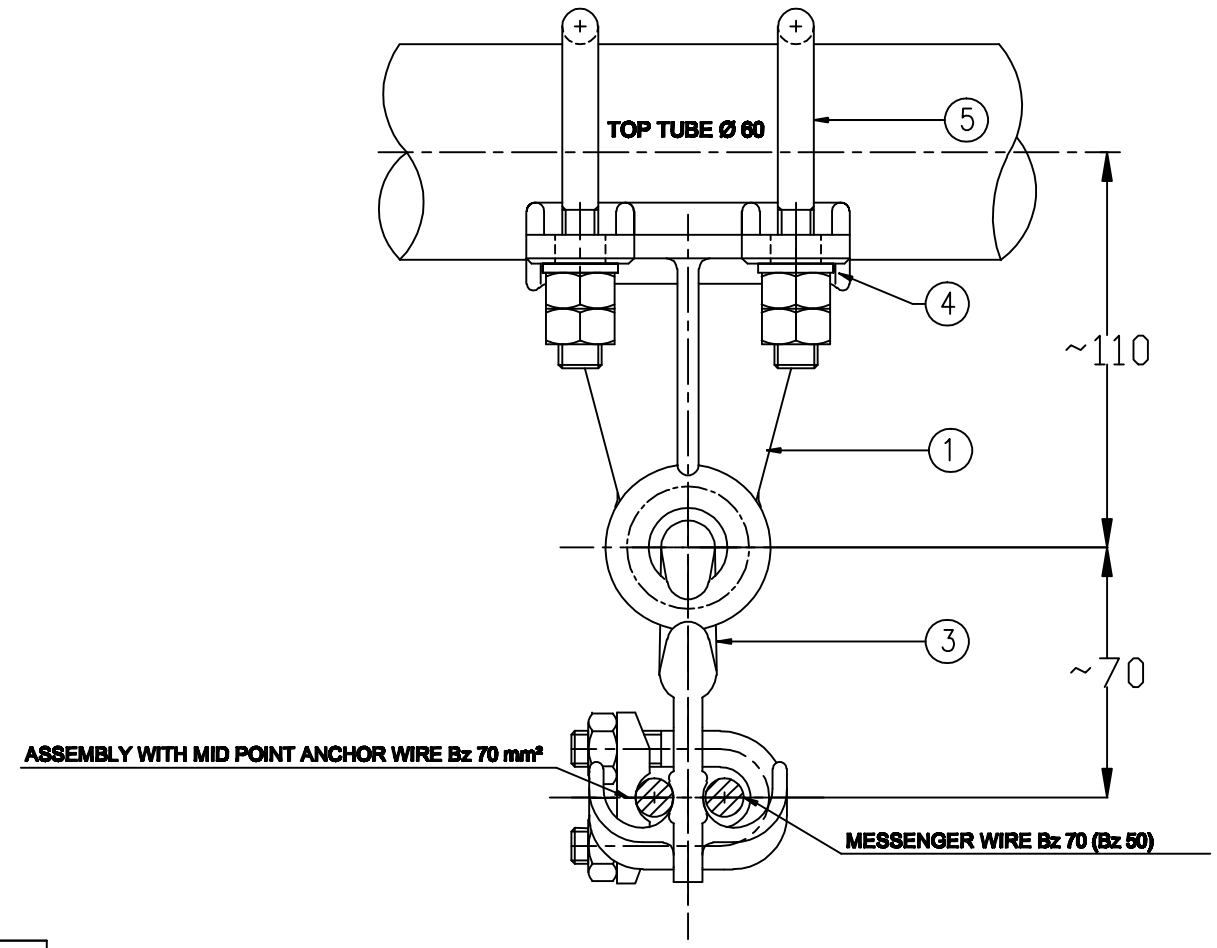

QUANTITY 102	QUANTITY 101	ITEM	DESIGNATION	UNIT MASS kg	REFERENCE DRAWING	MARK
2	2	5	U BOLT M12-80 (90/45) gr.4.6 WITH 2 NUTS		03LC00BDG143	122171
4	4	4	WASHER M12 gr.6		SR EN ISO 4034-2002	
1		3	HOOK WITH SWIWEL		ELC 13-1.4.0.B	
	1	2	HOOK WITH SWIWEL		ELC 13-1.4.0.A	
1	1	1	FASTENING FOR HOOK	0.95	ELC 13-1.3.1.A	

MARK GROUP: PR21052 / PR21021

Proiectat		Material:	21051;21052 — Pag.
Desenat			Inlocuieste desen nr. :
Verificat			Nr. inventar :
Contr.STAS			
Aprobat			
DIRECTIA INDUSTRIE		Scara:	SUSPENSION FOR 1 OR 2 MESSENGERS BDG070
		Data:	SA TIP I;II CU BRATARA PIVOT