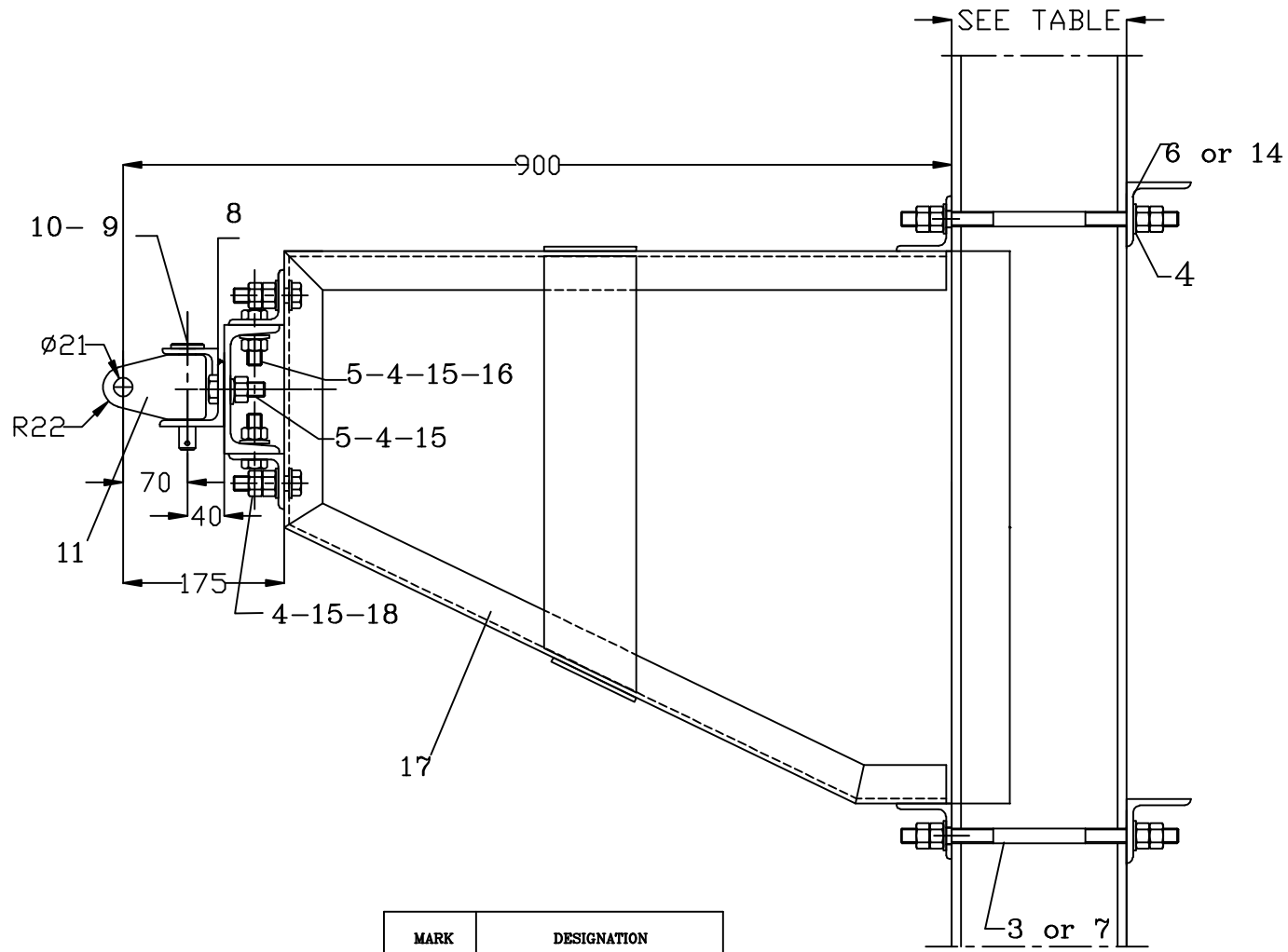

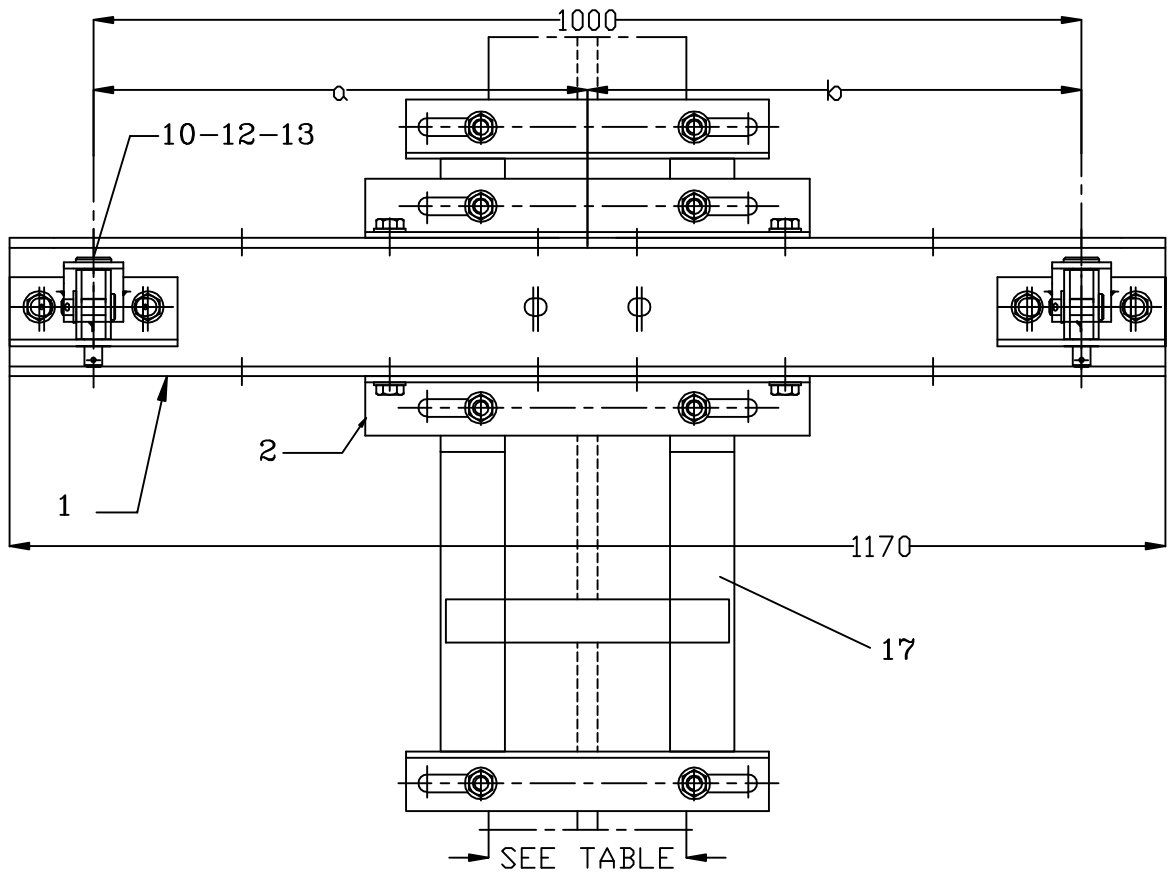

	MARK	DESIGNATION
PR21107	101	FROM HE 200 TO 240
PR21108	102	FROM HE 260 TO 320

Note
For cotes a and b see the mounting diagrams.

QUANTITY							
	4	4	18	BOLT HM 16-50/50		03LC00BDG144	1613K1
	1	1	17	FASTENING FOR 2 EQUIPEMENTS L=900		03LC00BDG212	
	4	4	16	WASHER TYPE U		03LC00BDG142	16A710
	8	8	15	WASHER . CS-16-32-2.8		03LC00BDG142	16A310
	2		14	COUNTERPLATE		03LC00BDG090	102
	2	2	13	AXIS 20-50		03LC00BDG146	201050
	2	2	12	WASHER M20		03LC00BDG142	20A110
	2	2	11	HINGE TOP TUBE		E.L.C 13-9-10 A REV C	
	4	4	10	PIN 4.5x40		03LC00BDG145	45A040
	2	2	9	AXIS 18-110		03LC00BDG146	181110
	2	2	8	HINGE SUPPORT		03LC00BDG114	
	4		7	THREADED ROD M16-450/100		03LC00BDG141	1611E2
		2	6	COUNTERPLATE		03LC00BDG090	101
	8	8	5	BOLT HM 16-50/50		03LC00BDG144	1612H1
	16	16	4	WASHER M16N		03LC00BDG142	16A110
		4	3	THREADED ROD M16 -350/100		03LC00BDG141	1611C2
	2	2	2	COUNTERPLATE FOR SPREADER		03LC00BDG094	
	1	1	1	SPREADER		03LC00BDG089	
MARK GROUP	102	101	ITEM	DESIGNATION	UNIT MASS kg	REFERENCE DRAWING	MARK

Proiectat		Material:	21107;21108
Desenat			Inlocuieste desen nr. :
Verificat			Nr. inventar :
Contr.STAS			
Aprobat			
DIRECTIA INDUSTRIE		Scara:	FASTENING FOR TOP TUBE FOR 2 CANTILEVER L=900 - BDG211
		Data:	PRELUNGITOR PT TRAVERSA 2 CONSOLE L=900 H240;320

Pag.