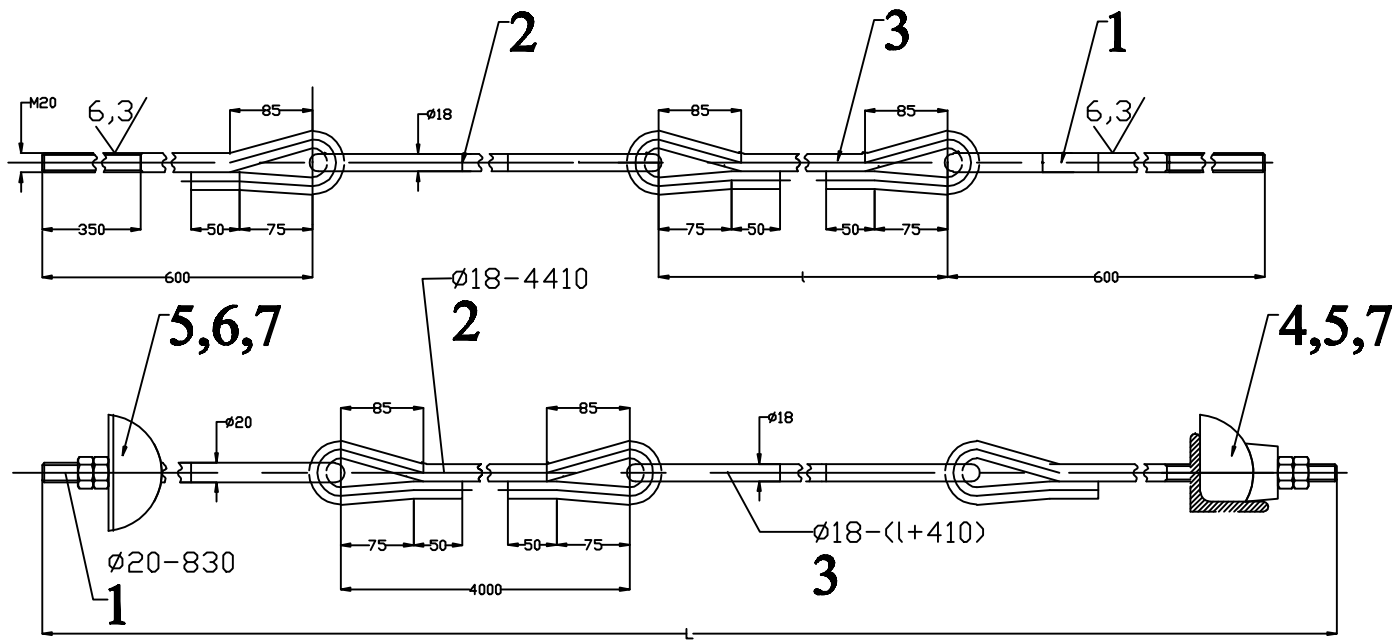

101 LEVEL ANCHOR	Mark	L	l		102 SPECIAL AMCHOR	Mark	L	l	
	101	10800	5500	PR17081		201	7800	2500	PR21434
	102	10500	5200	PR21443		202	7500	2200	PR21433
	103	10200	4900	PR21442		203	7200	1900	PR21457
	104	9900	4600	PR20132		204	6900	1600	PR20131
	105	9600	4300	PR21441		205	6600	1300	PR21432
	106	9300	4000	PR21439		206	6300	1000	PR21431
	107	9000	3700	PR21438		207	6000	700	PR21429
	108	8700	3400	PR21437		208	5700	400	PR21428
	109	8400	3100	PR21436		209	5400	*	PR21427
	110	8100	3800	PR21435		210	5100	*	PR21426

ITEM	DESIGNATION	UNIT	MATERIAL TECHNICAL SPECIFICATION
7	WASHER A20	2	
6	SPHERICAL WASHER ELC 31-5	1	
5	NUT M20	4	
4	WASHER CORNER ELC16-12-3-0	1	
3	INTERMEDIARY ROD II	1	S235JR
2	INTERMEDIARY ROD I	1	S235JR
1	THREADED ROD	2	S235JR

NOTE:

1.Will be hot galvanized AT/OL/Zn600, exept the threads AT/OL/Zn310 -STAS 7221-90, witch will be run in.

2. After the hot galvanize, the parts without zinc will be retouch with paint with min 95% zinc, in two layers.

3. For standard situation, when the distance between NS and ground is 900mm, will be use marks I6 and II6 with cassette 05 LC 00BDG-156 mounted in the middle of regulation plate ELC 49-17. In particular situation, when the distance is different then 900mm or the anchors are installed at different distances than in the mounting diagrams, will be measure the necessary lenght.

4. ×At variants II9 and II10, item 3 disappeare and item 2 will have a length of 4200mm for the first case and 3800mm for the other.

Proiectat		Material:	Pag.
Desenat			
Verificat			Inlocuieste desen nr. :
Contr.STAS			Nr. inventar :
Aprobat			
DIRECTIA INDUSTRIE		Scara:	ANCHOR TIE ROD ø18 – BDG130
		Data:	TENSOR ANCORARE ø18